1	2	3	4	5	6	7	8	9	10

POWER CIRCUIT

TRAVELLING POWER SUPPLY SYSTEM

ADDRESS NO. A1

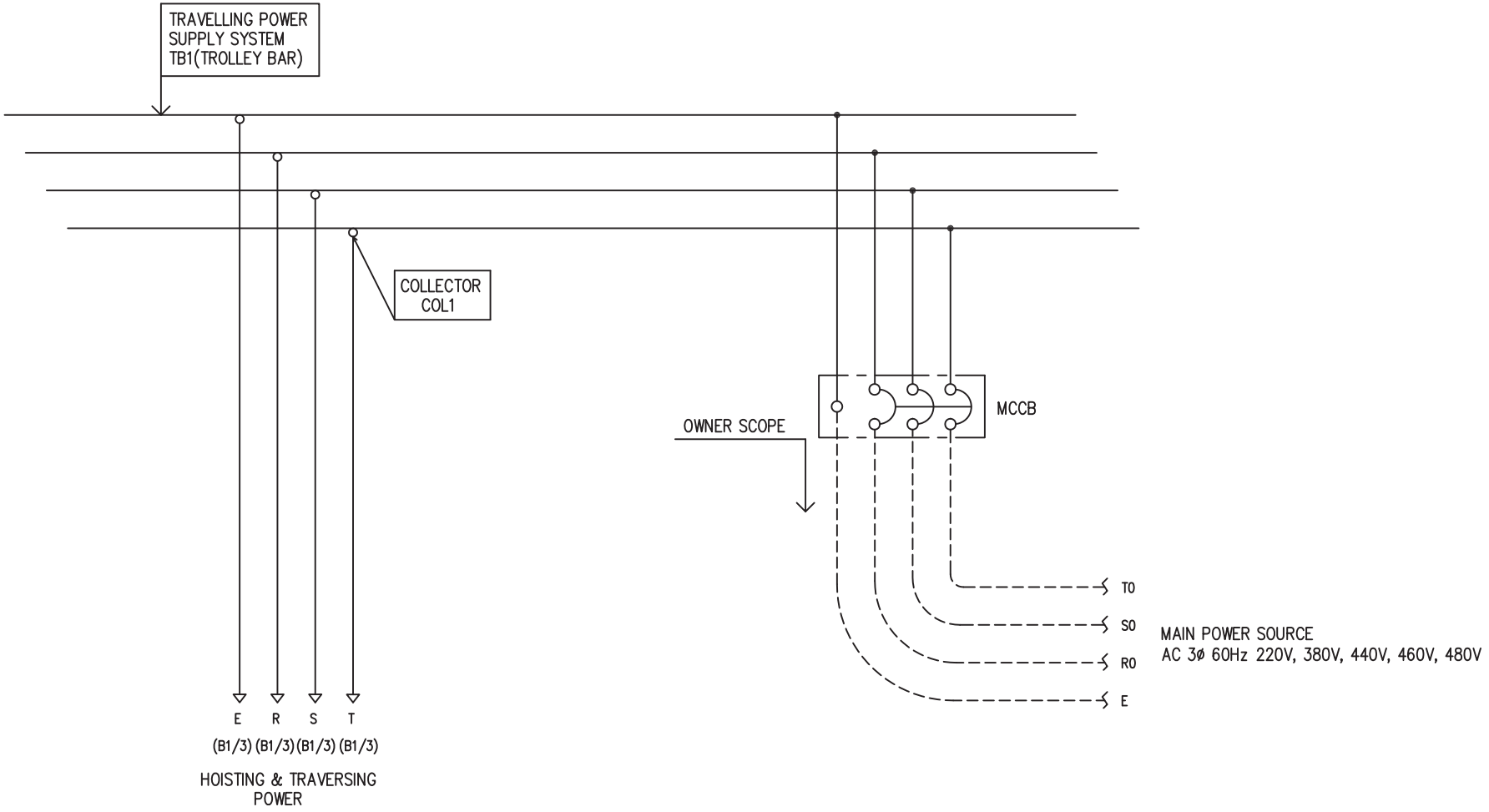

-NOTE-

1. — — — — MARKED OWNER SCOPE
2. ———— MARKED CRANEMAKER SCOPE

TITLE				PROJECTION	
MAIN POWER CIRCUIT DIAGRAM1					
WORK NO	WORK NAME			SCALE	Q' TY
601	LTDM 220V, 380V, 440V, 460V,480V			1/1	1
DRAWN	CHECKED	REVIEWED	APPROVED	DRAWING NO	LTDM
LEE G.H.				CODE NO	
2010.07.20					

L K HOIST CO., LTD.

1	2	3	4	5	6	7	8	9	10	
POWER CIRCUIT					CONTROL CIRCUIT				ADDRESS NO.	B1

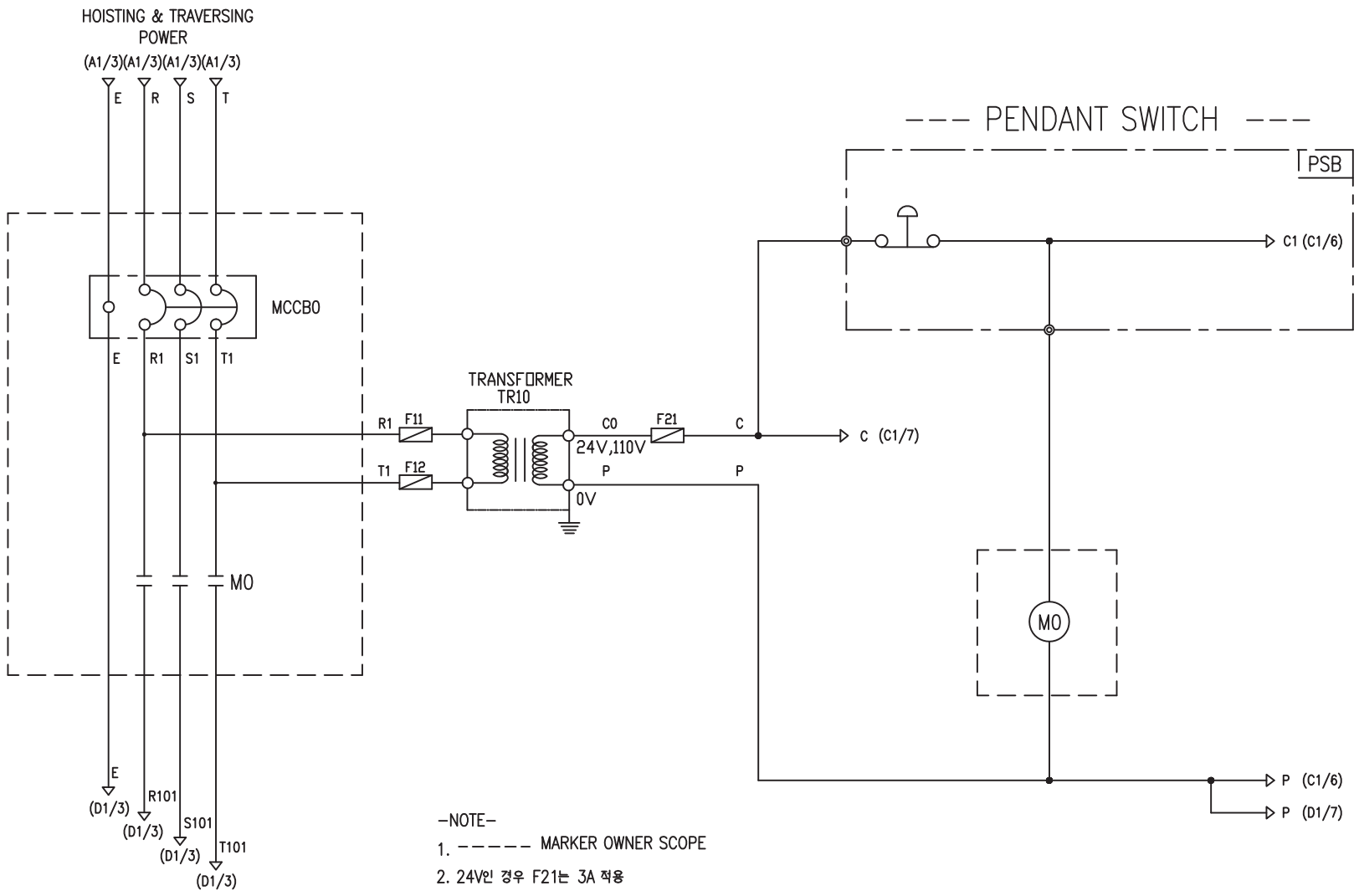

-NOTE-

1. ----- MARKER OWNER SCOPE
2. 24V인 경우 F21는 3A 적용

SPECIFICATION	NO FUSE BREAKER		MAGNET CONTACT		TRANSFORMER	FUSE
SYMBOLS	MCCBO		MO		TR10	F11, F12, F21
DESCRIPTION	220V	20A	GMC18	DMC18	30VA	1A
	380V	15A				
	440V	15A				
	460V	15A				
	480V	15A				
MAKER	LS		LS	DONGA	LK	-

TITLE				PROJECTION	
MAIN POWER & CONTROL CIRCUIT DIAGRAM					
WORK NO	WORK NAME			SCALE	Q' TY
602	LTDM			1/1	1
	220V, 380V, 440V, 460V, 480V				
DRAWN	CHECKED	REVIEWED	APPROVED	DRAWING NO	LTDM
LEE.G.H				CODE NO	
2010.07.20					

LK L K HOIST CO., LTD.

1	2	3	4	5	6	7	8	9	10	
HOIST POWER CIRCUIT					HOIST CONTROL CIRCUIT				ADDRESS NO.	C1

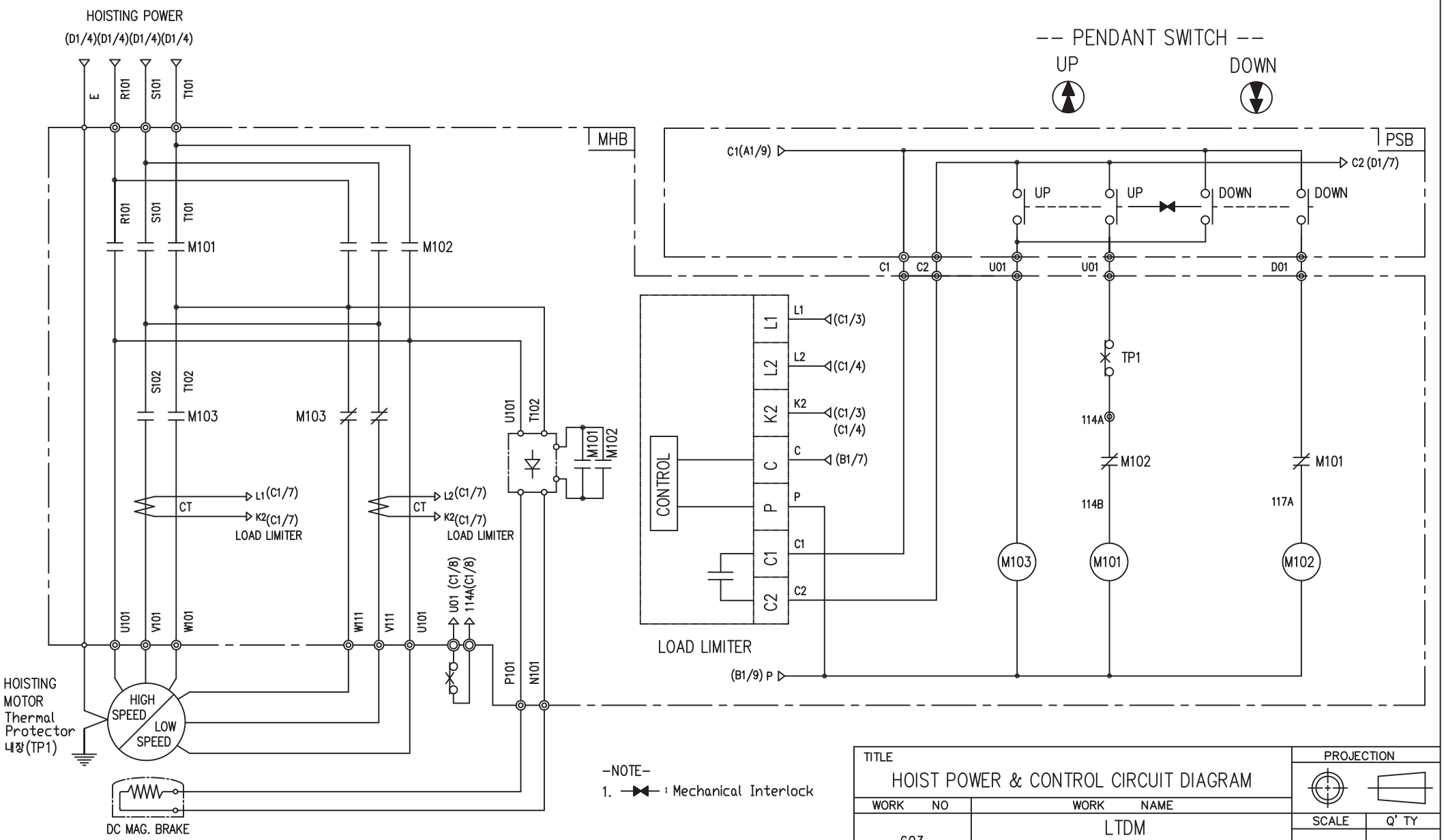

-NOTE-

1. ⟶⟵ : Mechanical Interlock

SPECIFICATION	MAGNET CONTACT		LOAD LIMITER	Thermal Protector	SILICON RECTIFIER					HOIST MOTOR
SYMBOLS	M101, M102 , M103		–	TP1	DPM30					HM
DESCRIPTION	GMC12	DMC12	LKDL-501	17AM032	220V	380V	440V	460V	480V	2.0Kw*2P, 0.5Kw*8P
					DC99V	DC171V	DC198V	DC207V	DC216V	
MAKER	LS	DONGA	LK	Texas Instruments	LK					LK

TITLE				PROJECTION
HOIST POWER & CONTROL CIRCUIT DIAGRAM				
WORK NO	WORK NAME			SCALE / Q' TY
603	LTDM			1/1 / 1
	220V, 380V, 440V, 460V, 480V			
DRAWN	CHECKED	REVIEWED	APPROVED	MODEL: LTDM
LEE.G.H				CODE NO
2010.07.20				

L K HOIST CO., LTD.

1	2	3	4	5	6	7	8	9	10	
TRAVERSING POWER CIRCUIT					TRAVERSING CONTROL CIRCUIT				ADDRESS NO.	D1

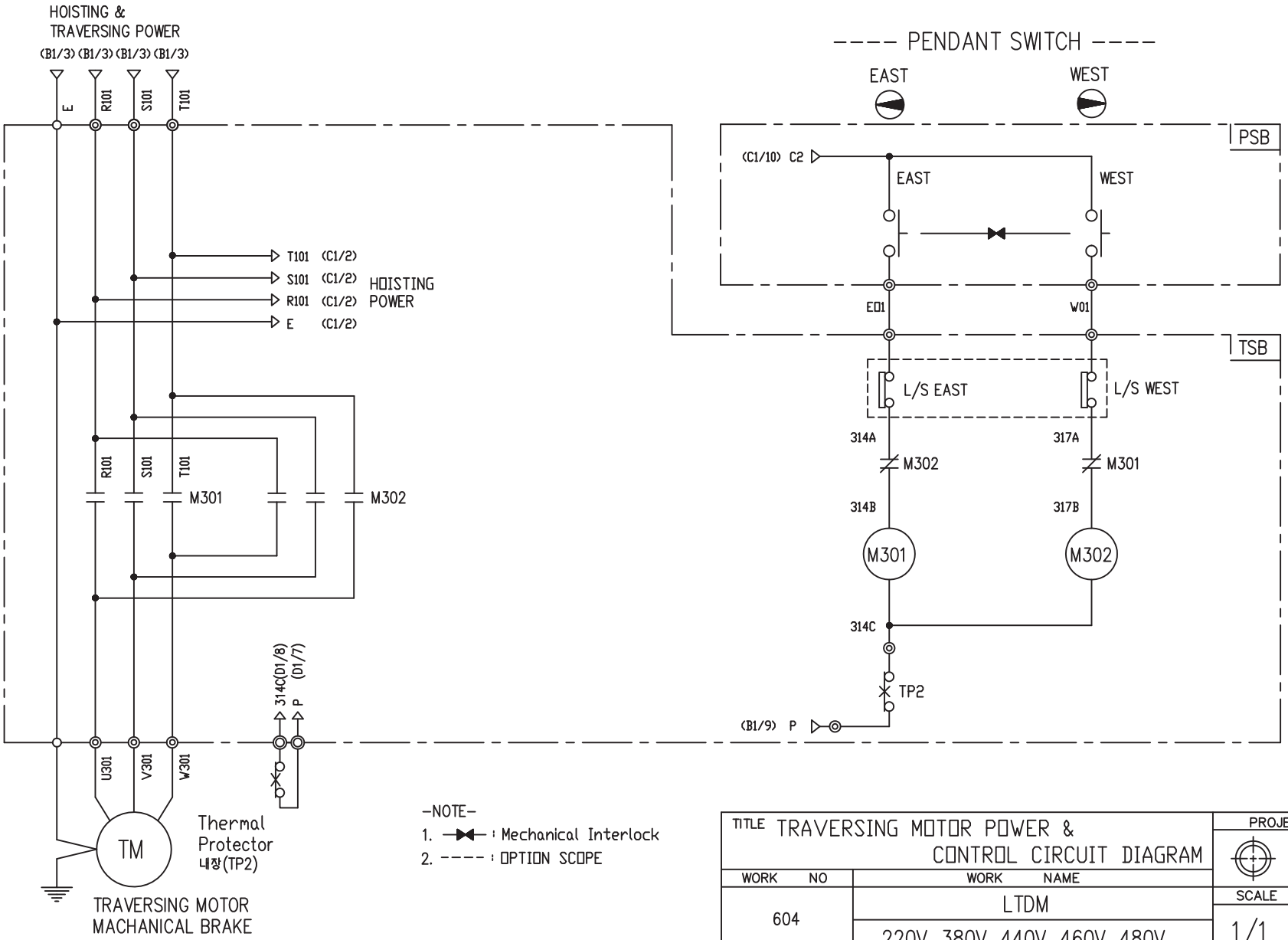

-NOTE-

1. ⊣⊢ : Mechanical Interlock
2. ---- : OPTION SCOPE

SPECIFICATION	MAGNET CONTACT		Thermal Protector	TRAVERSING MOTOR	
SYMBOLS	M301, M302		TP2	TM	
DESCRIPTION	GMC12	DMC12	17AM032	0.2KW *4P	0.3KW *2P
MAKER	LS	DONGA	Texas Instruments	LK	

TITLE	TRAVERSING MOTOR POWER & CONTROL CIRCUIT DIAGRAM				PROJECTION
WORK NO	WORK NAME				SCALE / Q' TY
604	LTDM				1/1 / 1
	220V, 380V, 440V, 460V, 480V				
DRAWN	CHECKED	REVIEWED	APPROVED	MODEL	LTDM
LEE.G.H				CODE NO	
2010.07.20					

LK L K HOIST CO., LTD.

1	2	3	4	5	6	7	8	9	10	
TRAVERSING POWER CIRCUIT					TRAVERSING CONTROL CIRCUIT				ADDRESS NO.	D1

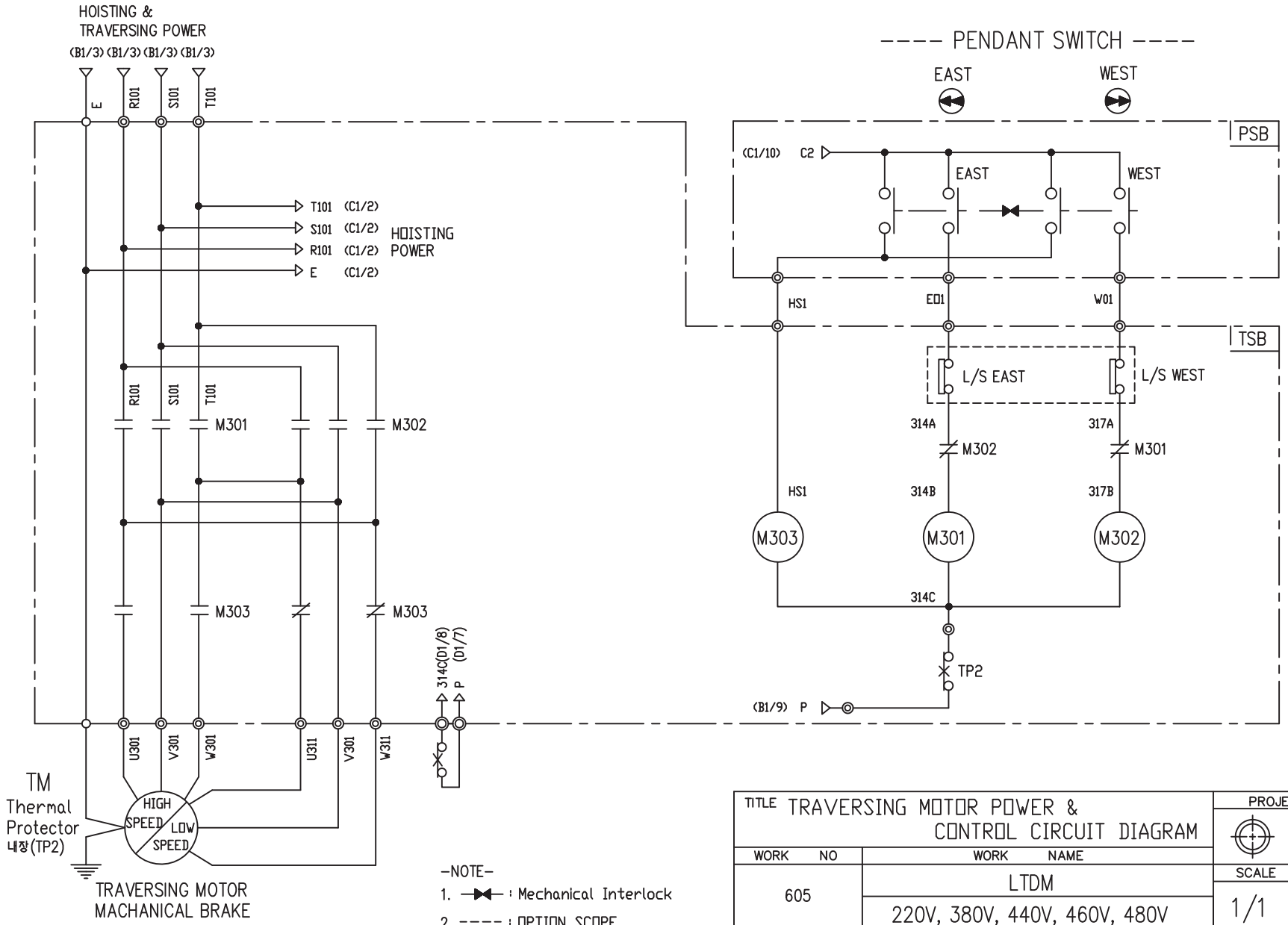

-NOTE-

1. ⊣⊢ : Mechanical Interlock
2. ---- : OPTION SCOPE

SPECIFICATION	MAGNET CONTACT		Thermal Protector	TRAVERSING MOTOR
SYMBOLS	M301, M302, M303		TP2	TM
DESCRIPTION	GMC12	DMC12	17AM032	0.3Kw * 2P/0.15Kw * 8P
MAKER	LS	DONGA	Texas Instruments	LK

TITLE	TRAVERSING MOTOR POWER & CONTROL CIRCUIT DIAGRAM			PROJECTION
WORK NO	WORK NAME			
605	LTDM			SCALE 1/1
	220V, 380V, 440V, 460V, 480V			Q' TY 1
DRAWN	CHECKED	REVIEWED	APPROVED	MODEL LTDM
LEE.G.H				CODE NO
2010.07.20				

LK L K HOIST CO., LTD.

SCHEDULE OF TECHNICAL DATA

1. SERVICE	HOISTING
2. MANUFACTURE	LK HOIST CO. LTD
3. MOTOR MODEL NO	2.0/0.5 - 2/8 - 38
4. RATED POWER	2.0/0.5 KW × 2/8 P
5. RATED VOLTAGE AND FREQUENCY	380 V 60HZ
6. MOTOR TYPE	SQUIRREL CAGE ROTOR TYPE
7. RATING	30 MIN
8. LOCATION	IN-DOOR , OUTDOOR
9. INSULATION CLASS	B
10. DESIGN TEMPERATURE RISE (BY RESISTANCE)	80℃
11. FULL LOAD SPEED	3450 / 850 RPM
12. FULL LOAD CURRENT	5.9/2.8 A
13. STARTING CURRENT AT RATED VOLTAGE	29.5/14.0 A
14. MINIMUM STARTING VOLTAGE	342 V
15. EFFICIENCY AT 100% RATED LOAD	71 / 52 %
16. POWER FACTOR AT 100% RATED LOAD	73 / 53%
17. STARTING TORQUE	242 / 236 %
18. TYPE OF ENCLOSURE	전폐형
19. TYPE OF BEARING	PL : 6008DD OPL : 6207ZZ
20. MOUNTING	VERTICAL
21. MAXIMUM AMBIENT TEMPURE	40℃
22. BEARING LUBRICATION	GREASE
23. STARTING METHOD	FULL VOLTAGE

SCHEDULE OF TECHNICAL DATA

1. SERVICE	TRAVERSING
2. MANUFACTURE	LK HOIST CO. LTD
3. MOTOR MODEL NO	0.3 - 2 - 38
4. RATED POWER	0.3 KW × 2 P
5. RATED VOLTAGE AND FREQUENCY	380 V 60HZ
6. MOTOR TYPE	SQUIRREL CAGE ROTOR TYPE
7. RATING	15 MIN
8. LOCATION	IN-DOOR , OUTDOOR
9. INSULATION CLASS	B
10. DESIGN TEMPERATURE RISE (BY RESISTANCE)	100℃
11. FULL LOAD SPEED	3440 RPM
12. FULL LOAD CURRENT	1.5 A
13. STARTING CURRENT AT RATED VOLTAGE	7.5 A
14. MINIMUM STARTING VOLTAGE	342 V
15. EFFICIENCY AT 100% RATED LOAD	56.3 %
16. POWER FACTOR AT 100% RATED LOAD	55.9 %
17. STARTING TORQUE	232 %
18. TYPE OF ENCLOSURE	전폐형
19. TYPE OF BEARING	PL : 6008DD OPL : 6207ZZ
20. MOUNTING	VERTICAL
21. MAXIMUM AMBIENT TEMPURE	40℃
22. BEARING LUBRICATION	GREASE
23. STARTING METHOD	FULL VOLTAGE

SCHEDULE OF TECHNICAL DATA

1. SERVICE	TRAVERSING
2. MANUFACTURE	LK HOIST CO. LTD
3. MOTOR MODEL NO	0.2 - 4 - 38
4. RATED POWER	0.2 KW × 4 P
5. RATED VOLTAGE AND FREQUENCY	380 V 60HZ
6. MOTOR TYPE	SQUIRREL CAGE ROTOR TYPE
7. RATING	15 MIN
8. LOCATION	IN-DOOR , OUTDOOR
9. INSULATION CLASS	B
10. DESIGN TEMPERATURE RISE (BY RESISTANCE)	100℃
11. FULL LOAD SPEED	1690 RPM
12. FULL LOAD CURRENT	1.2 A
13. STARTING CURRENT AT RATED VOLTAGE	6.0 A
14. MINIMUM STARTING VOLTAGE	343 V
15. EFFICIENCY AT 100% RATED LOAD	51.3 %
16. POWER FACTOR AT 100% RATED LOAD	49.4 %
17. STARTING TORQUE	232 %
18. TYPE OF ENCLOSURE	전폐형
19. TYPE OF BEARING	PL : 6008DD OPL : 6207ZZ
20. MOUNTING	VERTICAL
21. MAXIMUM AMBIENT TEMPURE	40℃
22. BEARING LUBRICATION	GREASE
23. STARTING METHOD	FULL VOLTAGE

SCHEDULE OF TECHNICAL DATA

1. SERVICE	TRAVERSING
2. MANUFACTURE	LK HOIST CO. LTD
3. MOTOR MODEL NO	0.3/0.15 - 2/8 - 38
4. RATED POWER	0.3/0.15 KW × 2/8 P
5. RATED VOLTAGE AND FREQUENCY	380 V 60HZ
6. MOTOR TYPE	SQUIRREL CAGE ROTOR TYPE
7. RATING	15 MIN
8. LOCATION	IN-DOOR , OUTDOOR
9. INSULATION CLASS	B
10. DESIGN TEMPERATURE RISE (BY RESISTANCE)	100℃
11. FULL LOAD SPEED	3440 / 840 RPM
12. FULL LOAD CURRENT	1.5 / 1.3 A
13. STARTING CURRENT AT RATED VOLTAGE	7.5 / 6.7 A
14. MINIMUM STARTING VOLTAGE	343 V
15. EFFICIENCY AT 100% RATED LOAD	56.3 / 42.5 %
16. POWER FACTOR AT 100% RATED LOAD	54.0 / 41.2 %
17. STARTING TORQUE	232/ 234 %
18. TYPE OF ENCLOSURE	전폐형
19. TYPE OF BEARING	PL : 6008DD OPL : 6207ZZ
20. MOUNTING	VERTICAL
21. MAXIMUM AMBIENT TEMPURE	40℃
22. BEARING LUBRICATION	GREASE
23. STARTING METHOD	FULL VOLTAGE